Assembly Instruction
Item #649-2X

Notre Dame Night Stand with USB Port

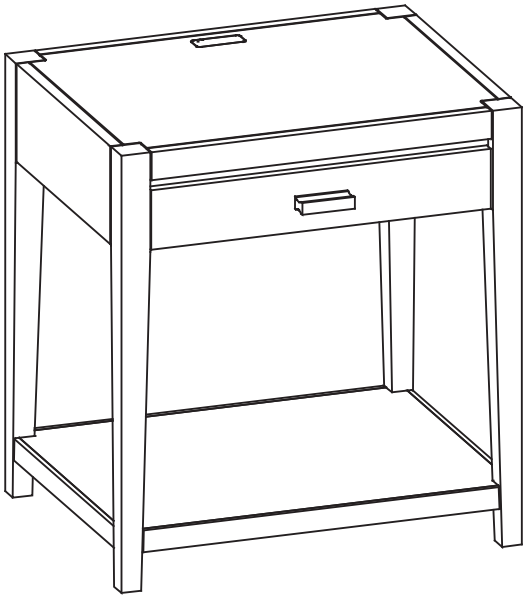

Parts List

No.	Description	Q'ty
A	Top Panel	1
B	Left Panel	1
C	Right Panel	1
D	Shelf	1
E	Back Panel	1
F	Drawer	1
G	Front Drawer	1

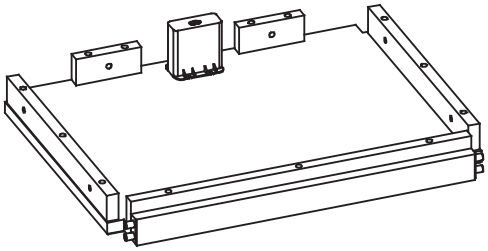

Top Panel (A)

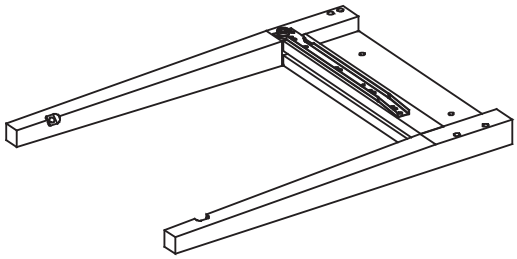

Left Panel (B)

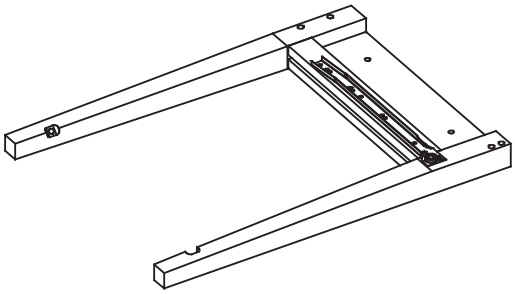

Right Panel (C)

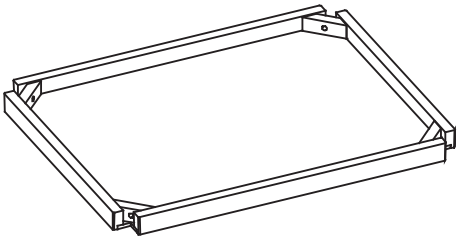

Shelf (D)

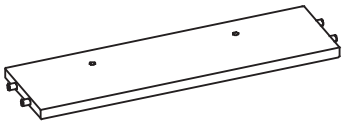

Back Panel (E)

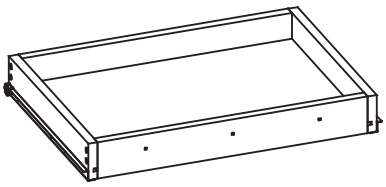

Drawer unit (F)

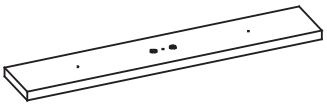

Drawer Front (G)

Hardware

No.	Description	Q'ty
RF10019	Screw F6 x 1"	3
RF10002	Screw F6 x 1 1/4"	2
RF10052	Screw JCB M6 x 30	6
RF10041	Screw JCB M6 x 40	4
RF40103	Allen Key	1
H00001	Handle	1

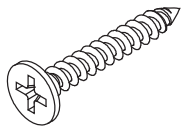
RF10019

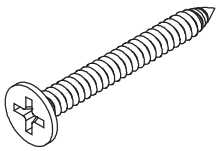
RF10002

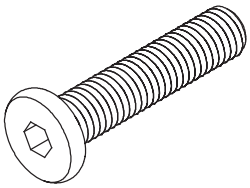
RF10052

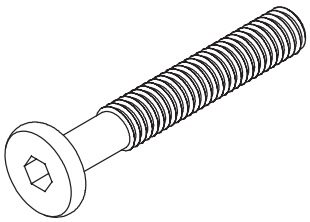
RF10041

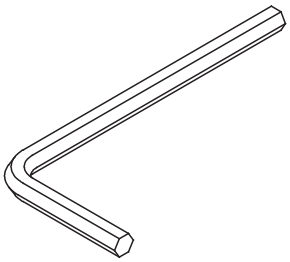
RF40103

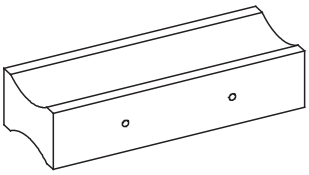
H00001

USB Port

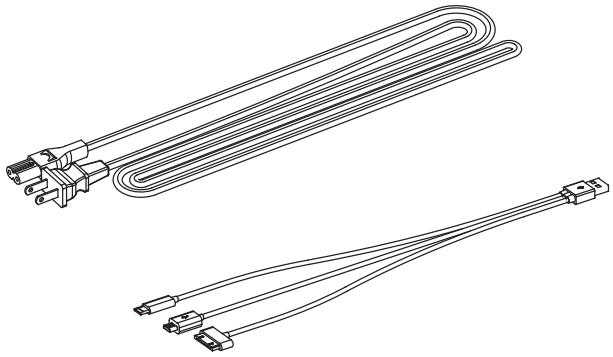

USB Adapter Specifications

Input Voltage	AC 100-240V 50/60Hz
Input Current	≤ 350mA @ 220V AC w/ full load
Output Voltage	5.0V ± 0.25V
Load Regulation	-0.5% (Max)
Output Current	3.1A Max
Output Ripple	< 400mV p-p
Efficiency	> 75% @ 220V AC
Output Plug	USB Type A x 4
Over Power	≈ 17W @ 220V AC
Short Protection	Auto Recovery

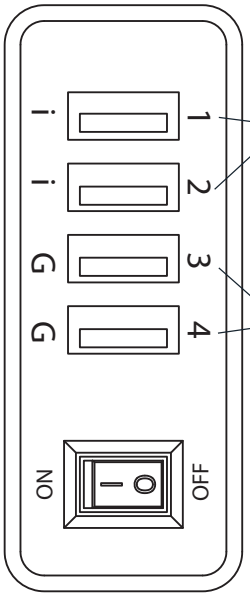

USB 1 & 2 PORTS
Fast charging ports for devices that require higher current, ideal for iPads and Android tablets, while also compatible with other mobile devices.

USB 3 & 4 PORTS
Standard USB ports, ideal for smartphones and other mobile devices.

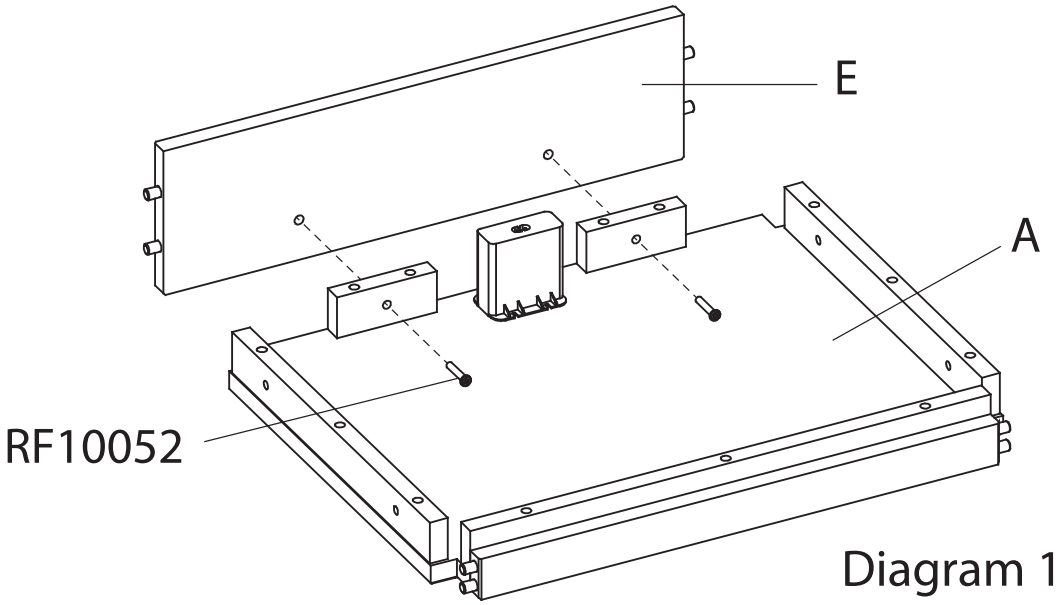

Diagram 1.

Step 1.

Invert the Top Panel (A) on a soft surface. Attach Back Panel (E) into the Top Panel (A) using 2 screw (RF10052) as per Diag. 1.

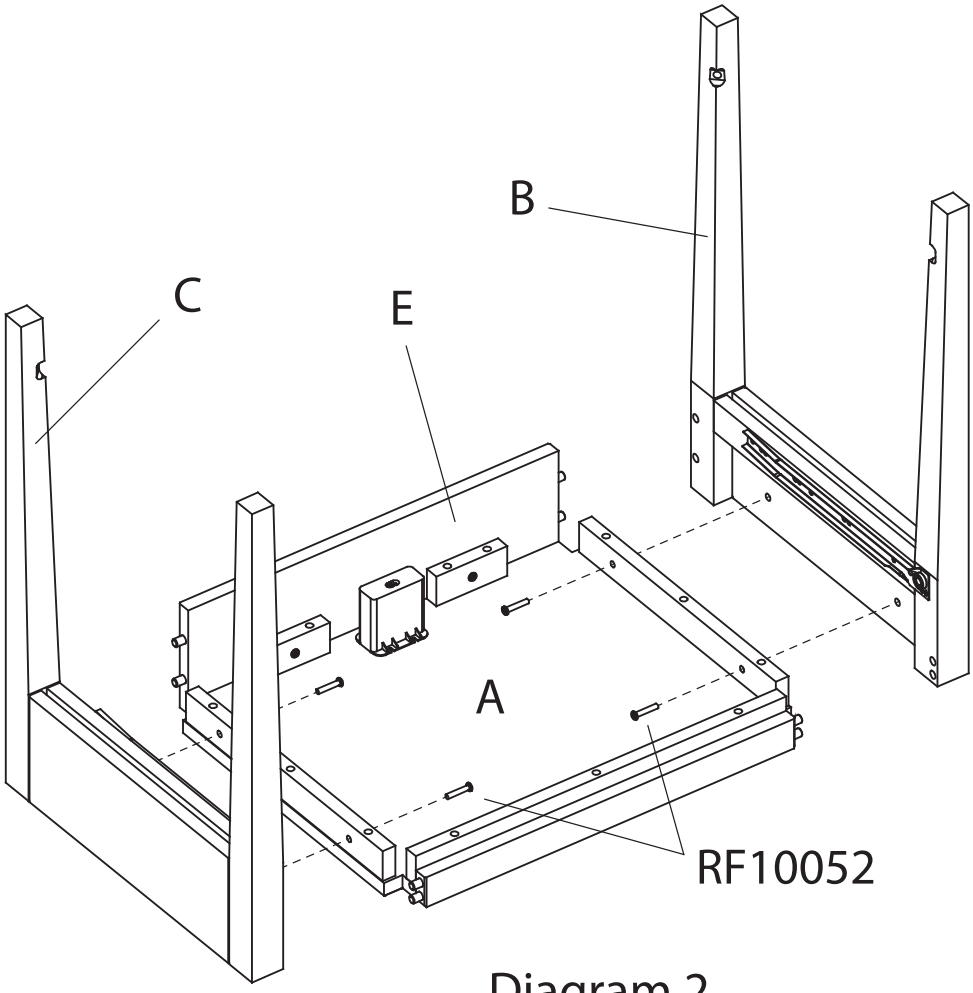

Diagram 2.

Step 2.

Attach Left and Right Panel (B&C) into the Top Panel (A) using 4 screw (RF10052) as per Diag. 2.

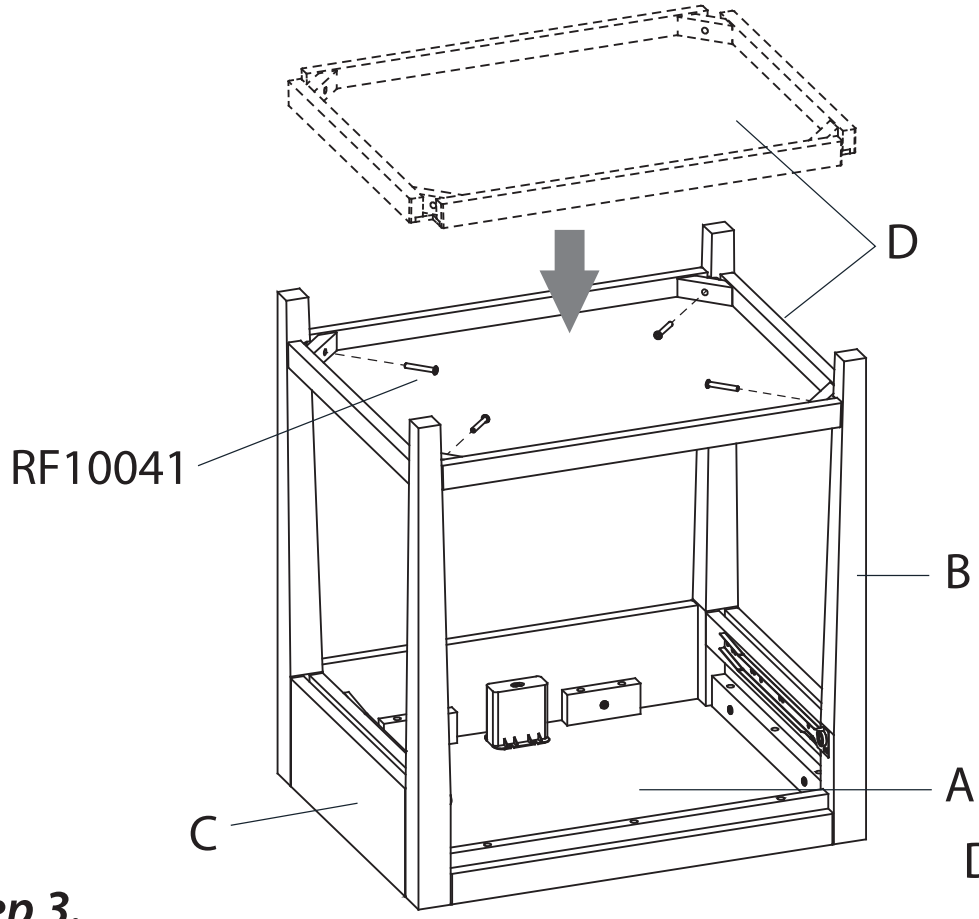

Diagram 3.

Step 3.

Insert Shelf (D) into Left and Right Panel (B&C) using 4 screw (RF10041) as per Diag. 3.

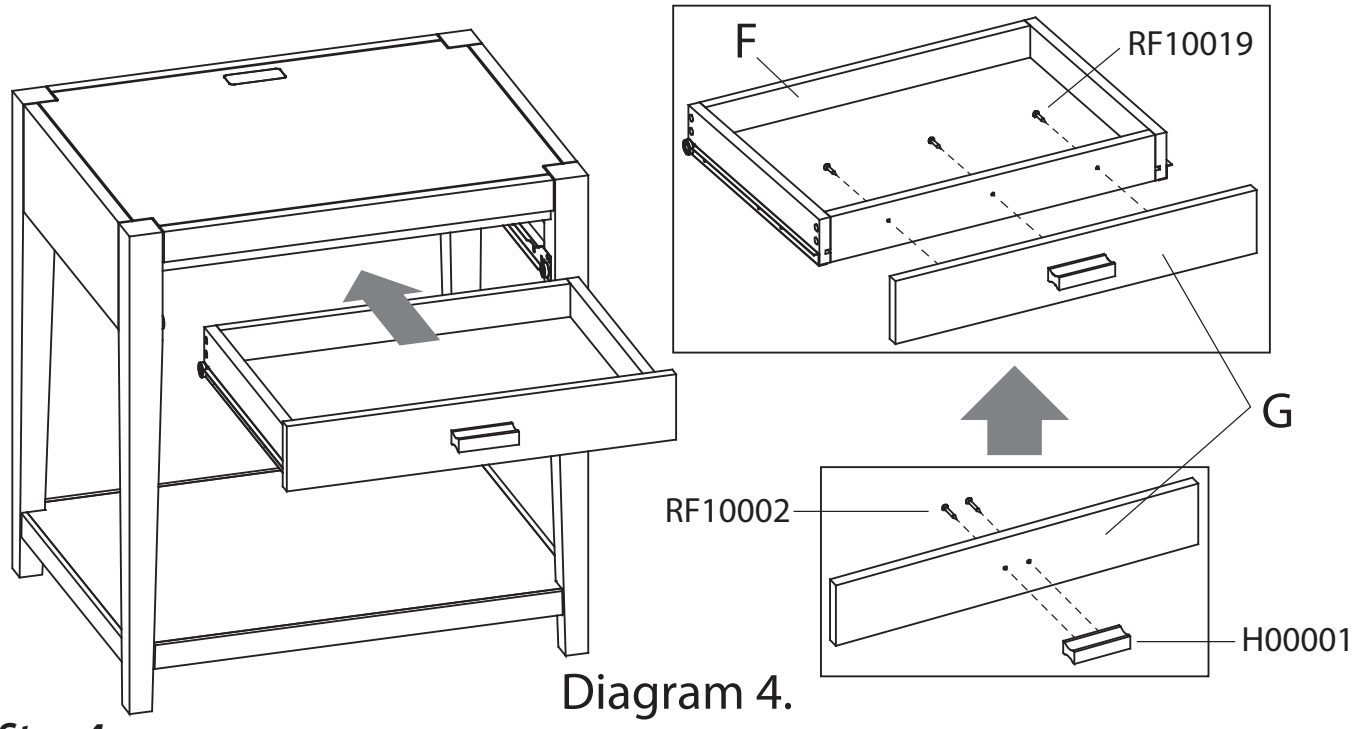

Diagram 4.

Step 4.

Attach Handle (H0001) into the Drawer Front (G) using 2 screw (RF10002). Then attach to the Drawer Unit (F) using 3 screw (RF10041) and slide in Drawer as per Diag. 4.